sauermann®

Authorized Distributor:
LOKATOR-K OOD
Residential Complex Gotse Delchev, Block 258, Entrance A
Sofia 1404, Tel.: + 359 2 9621881; + 359 2 9622138
Mobile: 0888 64 11 68 E-mail: office@lokatork.com www.lokatork.com

DATA SHEET

TH 110

Humidity and temperature transmitter

Configurable outputs

1 or 2 analogue outputs

- Measuring range from 5 to 95 %HR and from 0 to 50 °C[1] or from -20 to +80 °C[2]
- 0-10 V output, active, power supply 24 Vac/Vdc (3-4 wires) or 4-20 mA output, passive loop, power supply from 16 to 30 Vdc (2 wires)
- Housing with simplified mounting system
- ABS V0 housing IP65[2] or IP20[1], with or without display
- Alternating display of humidity and temperature
- "¼ turn" system mounting with wall-mount plate

Features of housing

Material	ABS V0 as per UL94
Protection	IP65[2] or IP20[1]
Display	LCD 10 digits. Size: 50 x 17 mm Alternating display of humidity and temperature
Height of digits	Values: 10 mm Units: 5 mm
Weight	124 g[1] or 135 g[2]
Cable gland	For cables Ø 8 mm maximum[2]
Cable of remote probes	Length: 2, 5 or 10 m, Ø 4.8 mm, in FEP (fluorinated ethylene propylene)

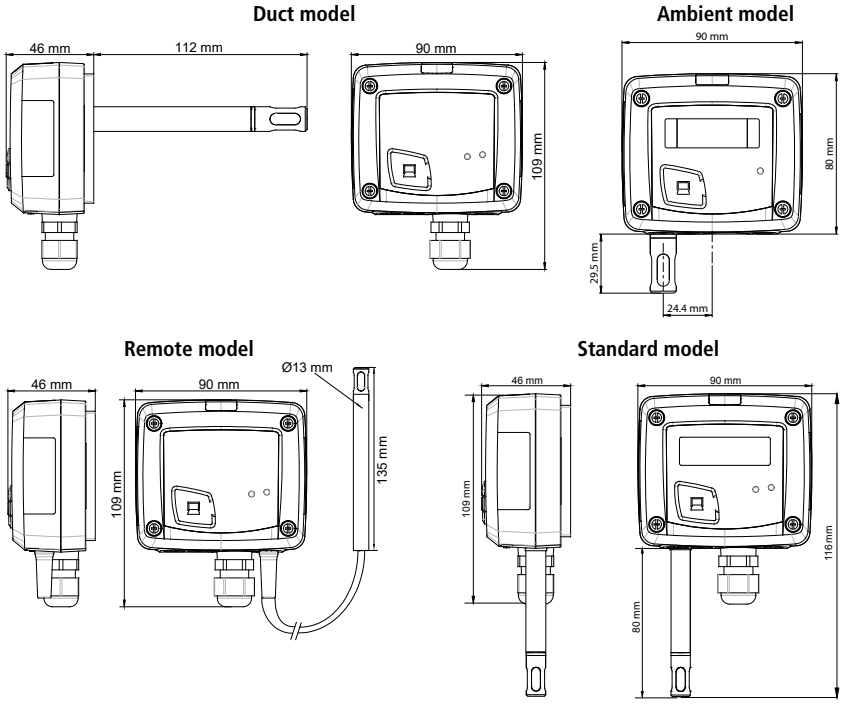

Part number

TH 110 — [A] — [N] — [S] — [ ]

Power supply / Output
A: Active 24 Vac/Vdc – 0-10 V
P: Passive – 16/30 Vdc - 4-20 mA

Display
O: With display
N: Without display

Type of probe
S: Ambient
A: Duct
D: Remote
ES: Standard

Probe cable length (remote models only)
( ): 2 m
05M: 5 m
10M: 10 m

Example: TH 110-ANS
Humidity and temperature transmitter TH 110, 0-10 V active, without display, ambient model.

Caution: the TH 110 – POES model (passive with display) is not available

[1] Ambient model / [2] Duct, remote and standard model.

General features

	Temperature	Humidity
Measuring range	From 0 to 50 °C ambient and standard models From -20 to +80 °C remote and duct models	From 5 to 95% RH
Analogue output*	From 0 to 50 °C	From 0 to 100% RH
Accuracy**	±0.4% of reading ±0.3 °C ambient model	±1.8% RH (if 15 °C ≤ T ≤ 25 °C) ambient model
	±0.3 °C (from -20 to +70 °C) ; ±0.5 °C beyond standard/duct/remote models	±1.5% RH (if 15 °C ≤ T ≤ 25 °C) remote, duct and standard models
Drift linked to temperature	-	±0.04 x (T-20) % RH (if T < 15 °C or T > 25 °C)
Units of measurement	°C/°F	% RH
Response time	1/e (63%) 15 s	1/e (63%) 4 s
Type of sensor	NTC	Capacitive
Resolution	0.1 °C	0.1% RH
Type of fluid	Air and neutral gases	Air and neutral gases

*Can be configured by switch.
**All the accuracy indicated in this technical datasheet were stated in laboratory conditions, and can be guaranteed for measurements carried out in the same conditions, or carried out with calibration compensation.

Technical specifications

Power supply / output	Active models 0-10 V (power supply 24 Vac/Vdc ±10%), 3-4 wires Passive models 4-20 mA (power supply 16/30 Vdc), 2 wires Common mode voltage < 30 VAC Maximum load: 500 Ω (4-20 mA). Minimum load: 10 kΩ (0-10 V)
Consumption	2 VA (0-10 V) or 0.6 VA (4-20 mA)
European directives	2014/30/EU EMC; 2014/35/EU Low Voltage; 2011/65/EU RoHS II; 2012/19/EU WEEE
Electrical connection	Screw terminal block for cables from 0.05 to 2.5 mm² or from 30 to 14 AWG. Executed following the good practices guidelines.
PC Communication	USB-mini Din cable
Environment	Air and neutral gases
Conditions of use (°C/%RH/m)	From 0 to 50 °C. In non-condensing conditions. From 0 to 2000 m.
Operating temperature of the probe	From -20 to +80 °C
Storage temperature	From -10 to +70 °C

Simplified calibration

Electronic board and measuring element connected to the front side of the sensor, which allows to configure and calibrate your device without causing any damage.

Connections

1. Active switch (S1)
2. Inactive switch
3. LCC-S software connection
4. Output terminal block
5. Power supply terminal block
6. Cable gland

Inside the front housing

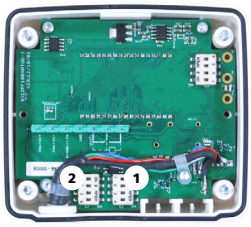

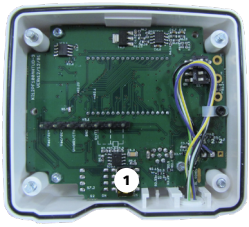

(standard model)

Removable front face

Fixed back housing

Symbols used

For your safety and in order to avoid any damage of the device, please follow the procedure described in this document and read carefully the notes preceded by the following symbol:

The following symbol will also be used in this document, please read carefully the information notes indicated after this symbol:

Electrical connections as per NFC15-100 standards

This connection must be made by a qualified and trained technician.
To make the connection, the transmitter must not be energized.

For TH 110-AOS, TH 110-ANS, TH 110-AOD, TH 100-AND, TH 110-AOA, TH 110-ANA TH 110-ANES, TH 110-AOES models with output 0-10 V - active:

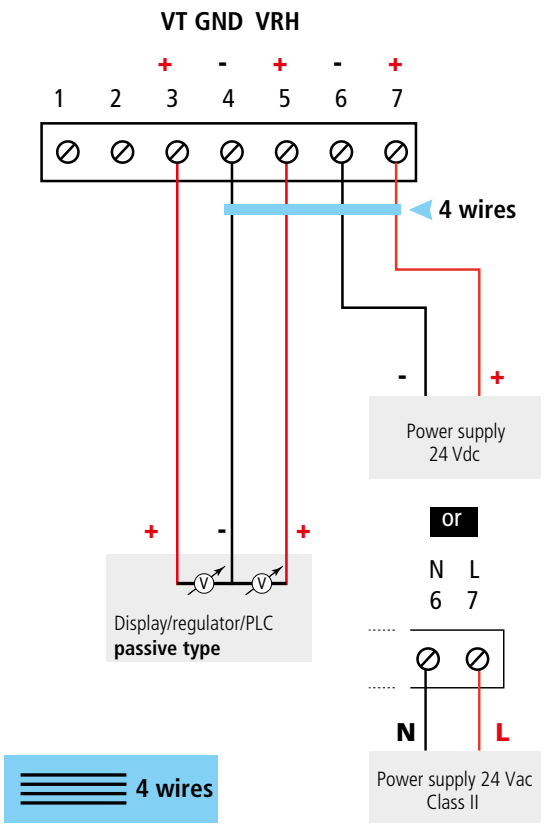

To make a 3-wire connection, BEFORE POWERING UP the transmitter, please connect the output ground to the input ground. See drawing below.

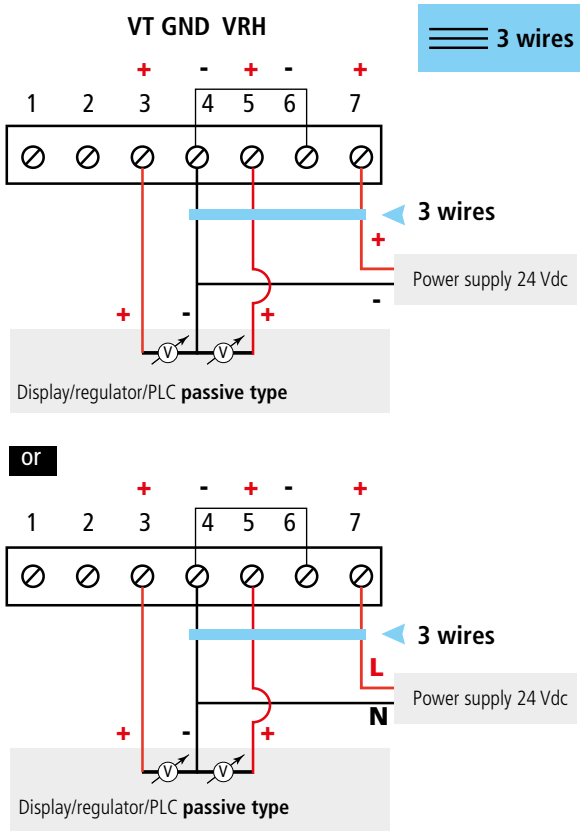

For TH 110-POS, TH 110-PNS, TH 110-POD, TH 110-PND, TH 110-POA, TH 110-PNA, TH 110-PNES models with output 4-20 mA - passive:

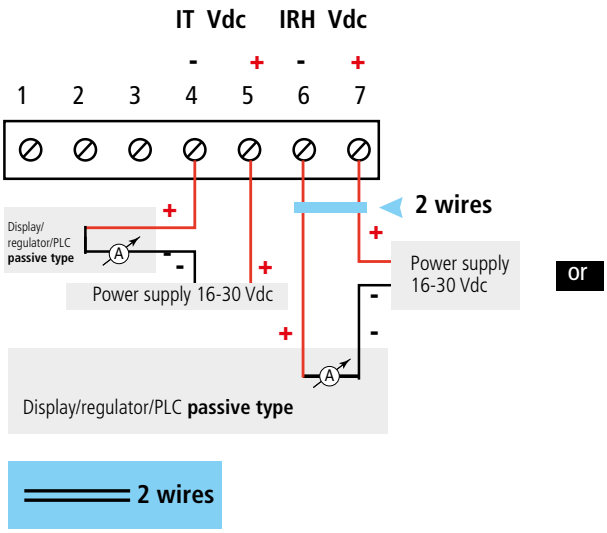

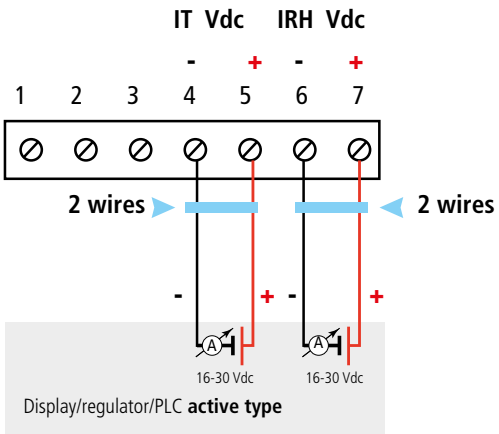

Settings and use of the transmitter

Configuration

It is possible to set the measuring ranges and the unit of the instrument either by switch and/or via software.

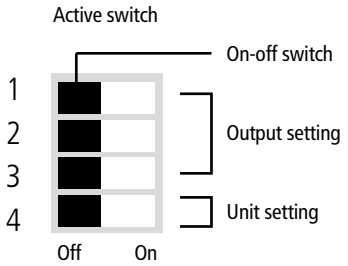

To configure the transmitter, it must not be energized. Then, you can make the settings required, with the DIP switches (as shown on the drawing below). When the transmitter is configured, you can power it up.

Please follow carefully the combinations beside with the DIP switch. If the combination is wrongly done, the following message will appear on the display of the transmitter "CONF ERROR". In that case, you will have to unplug the transmitter, place the DIP switches correctly, and then power the transmitter up.

Units setting – active switch

To set a unit of measurement, put the on-off switch 4 of the units as shown below.

Outputs setting – active switch

To set an output, put the on-off switches 1, 2 and 3 of the measuring ranges as shown below.

Configurations	°C	°F	From 0 to +50 °C	From -20 to +80 °C	From -50 to +50 °C	From 0 to +100 °C
Combinations						

Configuration via LCC-S software (option)

It is possible to configure intermediate ranges, an offset...

Example: for a 0-100 °C transmitter, minimum delta is 20 °C. The instrument can be configured from 0 to +20 °C or from -10 to +10 °C. In order to compensate a possible drift of the sensor, it is possible to add an offset to the displayed value by the TH 110 transmitter: it shows 48% RH, a standard instrument shows 45% RH. It is then possible, via the software, to integrate an offset of -3 to the displayed value by the TH 110 instrument.

The configuration of the parameters can be done either with the DIP switch or via software (you can not combine both solutions).

PC configuration

Set the DIP switches as shown beside. Connect the cable of the LCC-S to the connection of the transmitter.

Active switch (S1)

Please refer to the user manual of the LCC-S software to make the configuration.

Mounting

To mount the transmitter, mount the ABS plate on the wall (drilling: Ø 6 mm, screws and pins are supplied).
Insert the transmitter on the fixing plate (see A on the drawing beside). Rotate the housing in clockwise direction until you hear a "click" which confirms that the transmitter is correctly installed.

Ambient model does not have any mounting plate. 4 fixing holes are present inside the back housing. Use them to install the transmitter on the required location.

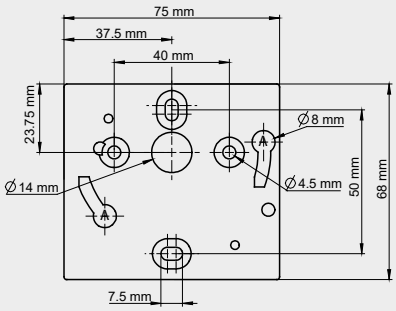

Maintenance:
- Avoid any aggressive solvent.
- Protect the transmitter and its probes from any cleaning product containing formalin, that may be used for cleaning rooms or ducts.

Precautions for use: always use the device in accordance with its intended use and within parameters described in the technical features in order not to compromise the protection ensured by the device.

Accessories

Part number	Description
KIAL-100A	Power supply class 2, 230 Vac input, 24 Vac output
KIAL-100C	Power supply class 2, 230 Vac input, 24 Vdc output
LCC-S	Configuration software with USB cable
Miscelaneous	Stainless steel sliding fittings / PC cable gland / ABS connection with connection gland / Stainless steel connections / Wall-mount plate for humidity remote probe

Only the accessories supplied with the device must be used.

Warranty

Instruments have 1-year guarantee for any manufacturing defect.

FT_EN – TH110 – 06/01/23 – Non-contractual document – We reserve the right to modify the characteristics of our products without prior notice.