Authorized Distributor:
LOKATOR-K OOD
Residential Complex Gotse Delchev, Block 258, Entrance A
Sofia 1404, Tel.: + 359 2 9621881; + 359 2 9622138
Mobile: 0888 64 11 68 E-mail: office@lokatork.com **www.lokatork.com**

DATA SHEET

HM 110

Humidity transmitter

Remote model

Configurable outputs

1 or 2 analogue outputs

- Measuring range from 5 to 95% RH
- 0-10 V output, active, power supply 24 Vac/Vdc (3-4 wires) or 4-20 mA
- ABS V0 housing IP65 (duct or remote model) or IP20 (ambient model), without display
- "¼ turn" system mounting with wall-mount plate
- Housing with simplified mounting system

Duct model

Ambient model

Features of the housing

Material	ABS V0 as per UL94
Protection	IP65 (remote and duct models) IP20 (ambiant model)
Cable of remote probes	2 m length and Ø 4.8 mm in FEP (fluorinated ethylene propylene)
Cable gland	For cables Ø 8 mm maximum
Weight	145 g (ambient model) 223 g (duct and remote models)

Duct model

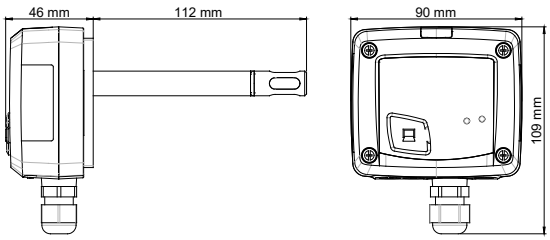

Ambient model

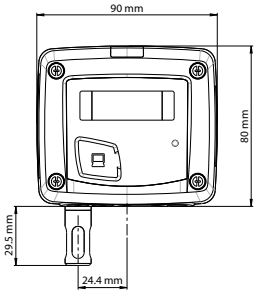

Remote model

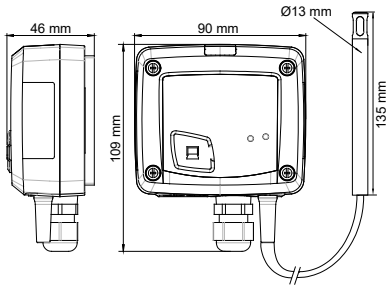

Part number

HM 110 — [A] — [N] — [S] — [ ]

Power supply / Output
A: active – 24 Vac/Vdc – 0-10 V
P: passif – 16/30 Vdc – 4-20 mA

Display
N: without display

Type of probe
S: Ambient
A: Duct
D: Remote

Probe cable length (remote model only)
( ): cable lentgh 2 m
05M: cable length 5 m
10M: cable length 10 m

Example: HM 110-ANS
Ambient humidity transmitter HM 110, active 0-10 V

General features

Measuring range	From 5 to 95% RH
Analogue output	From 0 to 100% RH
Accuracy*	±1.5% RH (if 15°C ≤ T ≤ 25°C) on remote and duct models ±2% RH (if 15°C ≤ T ≤ 25°C) on ambient model
Drift linked to temperature	±0.04 x (T-20) % RH (if 15°C ≤ T ≤ 25°C)
Unit of measurement	% RH
Response time	1/e (63%) 4 s
Type of sensor	Capacitive
Resolution	0.1% RH
Type of fluid	Air and neutral gases

*All the accuracy indicated in this technical datasheet were stated in laboratory conditions, and can be guaranteed for measurements carried out in the same conditions, or carried out with calibration compensation.

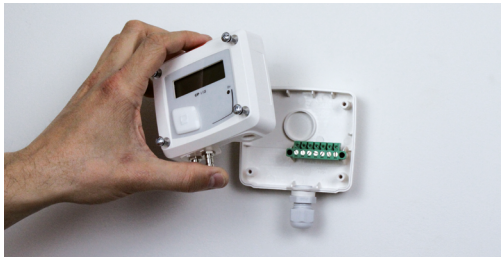

Simplified calibration

Electronic board and measuring element fixed to the front panel of the sensor, allowing you to leave your installation intact to configure or calibrate your instruments.

Technical specifications

Output / Power supply	Active models 0-10 V (power supply 24 Vac/Vdc ±10%), 3-4 wires Passive models 4-20 mA (power supply 16/30 Vdc), 2 wires Common mode voltage <30 VAC Maximum load: 500 Ω (4-20 mA) / minimum load: 1 kΩ (0-10 V)
Consumption	2 VA (0-10 V) or 0.6 VA (4-20 mA)
European directives	2014/30/EU EMC; 2014/35/EU Low Voltage; 2011/65/EU RoHS II; 2012/19/EU WEEE
Electrical connection	Screw terminal block for cables from 0.05 to 2.5 mm² or from 30 to 14 AWG Executed following the good practices guidelines.
PC communication	USB-mini DIN cable
Environment	Air and neutral gases
Conditions of use (°C/%HR/m)	From 0 to 50°C. In non-condensing conditions. From 0 to 2000 m.
Operating temperature of the probe	From -20 to 80 °C
Storage temperature	From -10 to 70 °C

Connections

1. Active switch (S1)
2. Inactive switch
3. LCC-S software connection
4. Output terminal block
5. Power supply terminal block
6. Cable gland

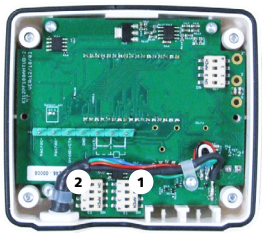

Inside the front housing

Removable front face

Fixed back housing

Symbols

For your safety and in order to avoid any damage of the device, please follow the procedure described in this document and read carefully the notes preceded by the following symbol:

The following symbol will also be used in this document, please read carefully the information notes indicated after this symbol:

Electrical connections - as per NFC15-100 standard

This connection must be made by a qualified and trained technician. To make the connection, the transmitter must not be energized.

For **HM 110-A** models with **0-10 V output – active:**

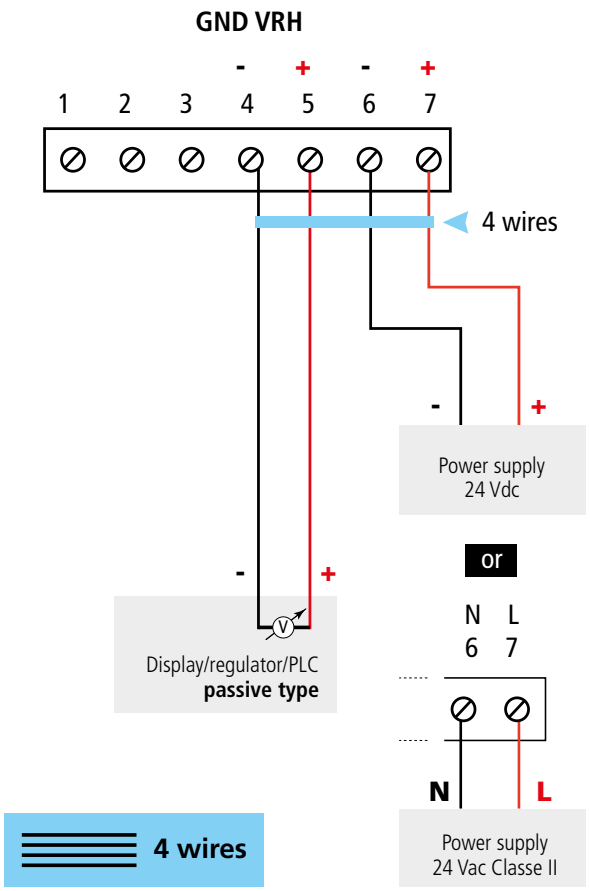

To make a 3-wire connection, before powering up the transmitter, please connect the output ground to the input ground. See drawing below.

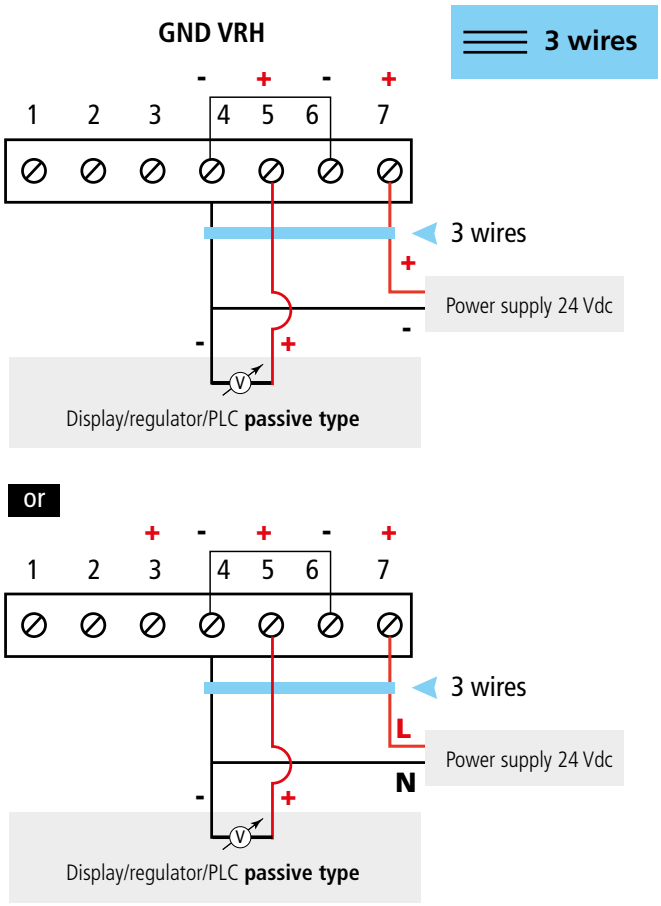

For **HM 110-P** models with **4-20 mA output – passive:**

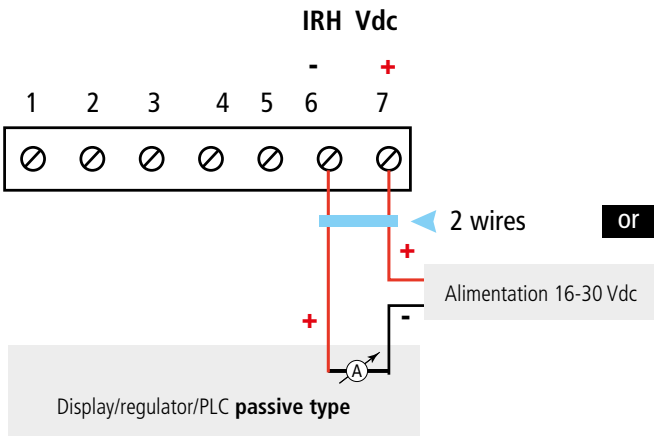

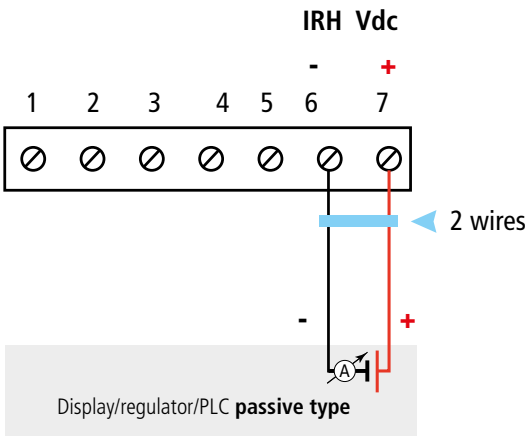

2 wires

Configuration via LCC-S software (option)

An easy and friendly configuration with the software!
It is possible to configure an offset, ...

Example: the instrument could be configured from 30 to 50% RH. In order to compensate a possible drift of the transmitter, it is possible to add an offset to the displayed value by the HM110 instrument: it shows 48% RH, a standard instrument shows 45% RH. It is then possible, via the software, to integrate an offset of -3 to the displayed value by the HM 110 instrument

To access the configuration via software:
Connect the cable of the LCC-S to the connection of the transmitter.

PC configuration

Active switch (S1)

Please refer to the optional LCC-S software to make the configuration.

Mounting

To mount the transmitter, mount the ABS plate on the wall (drilling: Ø 6 mm, screws and pins are supplied).
Insert the transmitter on the fixing plate (see A on the drawing beside). Rotate the housing in clockwise direction until you hear a "click" which confirms that the transmitter is correctly installed.

⚠ **Ambient model does not have any mounting plate. 4 fixing holes are present inside the back housing. Use them to install the transmitter on the required location.**

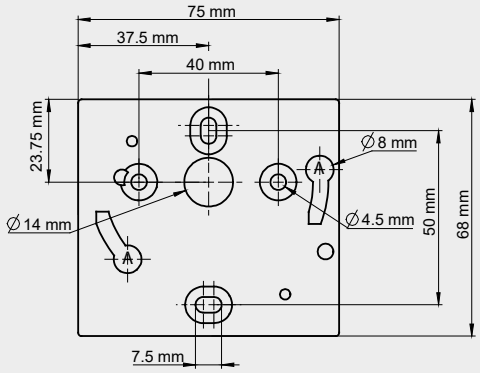

Maintenance:
- Avoid any aggressive solvent.
- Protect the transmitter and its probes from any cleaning product containing formalin, that may be used for cleaning rooms or ducts.

Precautions for use: always use the device in accordance with its intended use and within parameters described in the technical features in order not to compromise the protection ensured by the device.

Warranty

Instruments have 1-year guarantee for any manufacturing defect.

Accessories

Part number	Description
KIAL-100A	Power supply class 2, 230 Vac input, 24 Vac output
KIAL-100C	Power supply class 2, 230 Vac input, 24 Vdc output
LCC-S	Configuration software with USB cable

Stainless steel sliding fittings / PC cable gland / ABS connection with connection gland
Stainless steel connections / Wall-mount flange for humidity remote probe

FT_EN – HM110 – 23/04/2021 – Non-contractual document – We reserve the right to modify the characteristics of our products without prior notice.