Authorized Distributor:
LOKATOR-K OOD
Residential Complex Gotse Delchev, Block 258, Entrance A
Sofia 1404, Tel.: + 359 2 9621881; + 359 2 9622138
Mobile: 0888 64 11 68 E-mail: office@lokatork.com **www.lokatork.com**

DATA SHEET

CO 110

CO transmitter



Configurable intermediary ranges

ABS V0 housing, IP20, with or without display

- Range from 0 to 500 ppm
- 0-10 V active output, power supply 24 Vac/Vdc (3-4 wires) or 4-20 mA output, passive loop, power supply from 16 to 30 Vdc (2 wires)
- "¼ turn" system mounting with wall-mount plate
- Housing with simplified mounting system

Technical features

Unit of measurement	ppm
Measuring range	From 0 to 500 ppm
Accuracy*	±3 ppm or 3 % of the measured value
Type of sensor	Electrochemical sensor
Life-time of the sensor	5 years
Response time	T_{63} = 35 s
Resolution	0.1 ppm
Type of fluid	Air and neutral gas
Conditions of use (°C/%RH/m)	From 0 to +50 °C. In non-condensing condition. From 0 to 2000 m.
Storage temperature	From -10 to 70 °C

*All the accuracies indicated in this technical datasheet were stated in laboratory conditions, and can be guaranteed for measurements carried out in the same conditions, or carried out with calibration compensation.

Features of housing

Material	ABS V0 as per UL94
Protection	IP20
Display	LCD 10 digits. Size: 50 x 17 mm
Height of digits	Value: 10 mm; Unit: 5 mm
Weight	138 g

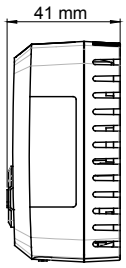

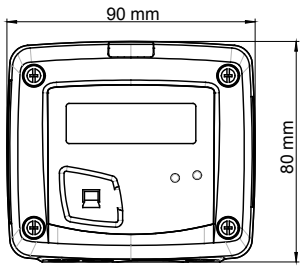

Part number

CO 110 — P — O — S

Power supply / Output
A: Active – 24 Vac/Vdc – 0-10 V
P: Passive – 16/30 Vdc – 4-20 mA

Display
O: With display
N: Without display

Example: CO 110-POS
CO transmitter, 4-20 mA passive transmitter, with display

Technical specifications

Output / Power supply	Active 0-10 V (power supply 24 Vac/Vdc ±10%), 3-4 wires Passive loop 4-20 mA (power supply 16/30 Vdc), 2 wires Common mode voltage <30 VAC Maximum load: 500 Ω (4-20 mA) / minimum load: 1 kΩ (0-10 V)
Consumption	2 VA (0-10 V) or 0.6 VA (4-20 mA)
European directives	2014/30/EU EMC; 2014/35/EU Low Voltage; 2011/65/EU RoHS II; 2012/19/EU WEEE
Electrical connections	Screw terminal block for cables from 0.05 to 2.5 mm² or from 30 to 14 AWG Carried out according to the code of good practice.
PC communication	USB-mini DIN cable
Environment	Air and neutral gas

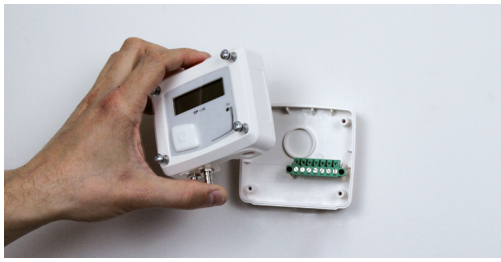

Simplified calibration

Electronic board and measuring element fixed to the front panel of the sensor, allowing you to leave your installation intact to configure or calibrate your instruments.

Connections

1. Electrochemical sensor
2. Inactive switch
3. Active switch
4. LCC-S software connection
5. Output terminal block
6. Power supply terminal block

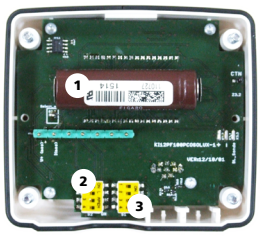

Inside the front housing



Removable front face

Fixed back housing

Symbols

For your safety and in order to avoid any damage of the device, please follow the procedure described in this document and read carefully the notes preceded by the following symbol:

The following symbol will also be used in this document, please read carefully the information notes indicated after this symbol:

Electrical connections – as per NFC15-100 standard

This connection must be made by a qualified and trained technician. To make the connection, the transmitter must not be energized.

For CO 110-A models with 0-10 V output – active:

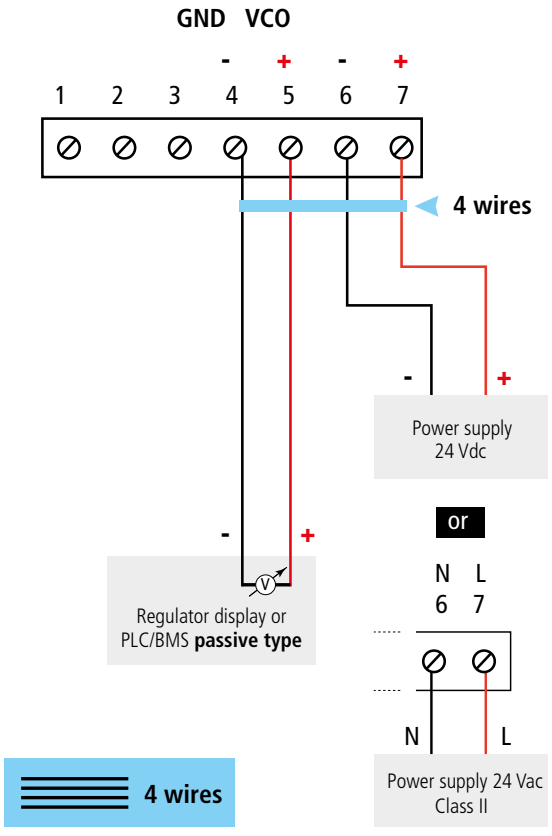

To make a 3-wire connection, before powering up the transmitter, please connect the output ground to the input ground. See drawing below.

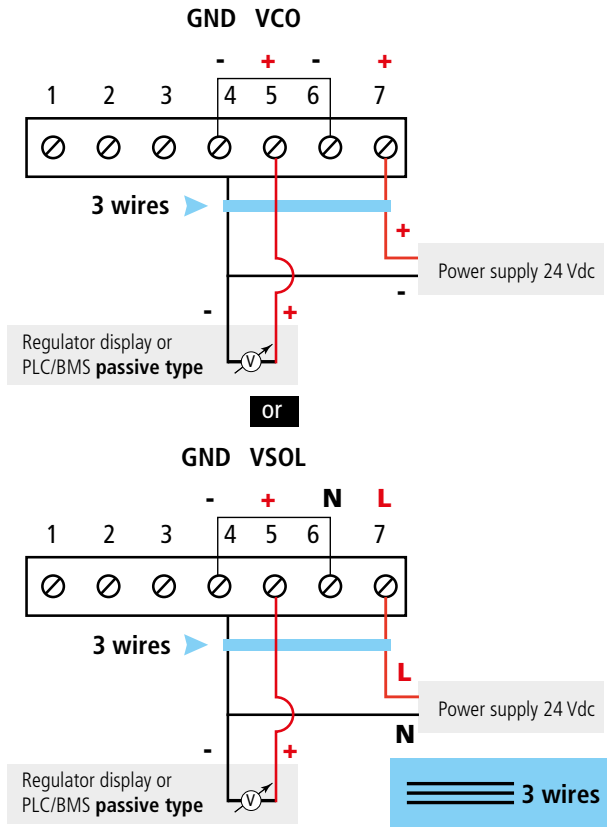

For CO 110-P models with 4-20 mA output – passive:

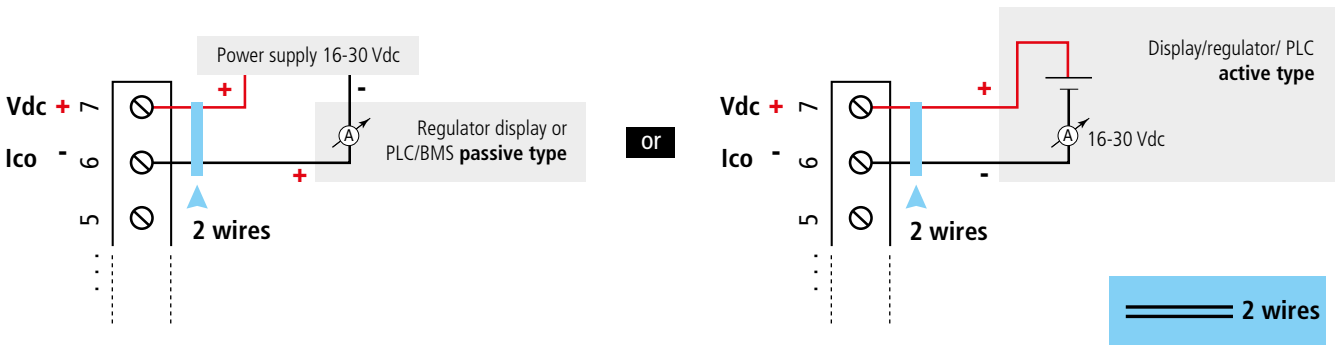

Settings and use of the transmitter

To configure the transmitter, it must not be energized. Then you can make the required settings thanks to the DIP switches as shown on the drawing below. When the transmitter is configured, you can power it up.

Configuration

To configure the transmitter, unscrew the 4 screws of the housing then open it. DIP switches allowing the different settings are accessible.

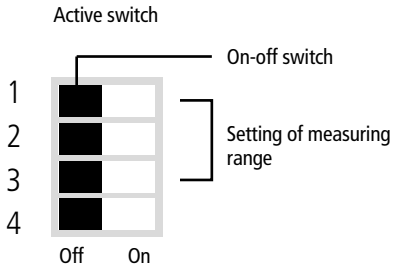

Measuring range setting

To set a measuring range, put the on-off switches 2, 3 and 4 as shown below:

Measuring ranges	Configuration via PC (from 0 to 500 ppm by default)	From 0 to 100 ppm	From 0 to 200 ppm
Combinations			

Configuration via LCC-S software (optional)

It is possible to configure intermediary ranges

Caution: the minimum difference between the minimum scale and the maximum scale is 20.
Example: for a 0-500 ppm transmitter, the minimum delta is 20 ppm.
So the transmitter could be configure from 0 to 70 ppm from 0 to 20 ppm.

Via software

Set the switch as shown beside
Connect the cable of the LCC-S to the connection of the transmitter

Configure the transmitter

Please refer to the LCC-S user manual.

Configuration via PC

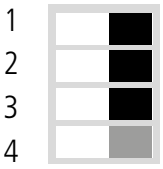

Active switch

Caution: the configuration of the parameters can be done either by DIP switch, or by software (you cannot combine both solutions).

Mounting

To mount the transmitter, mount the ABS plate on the wall (drilling: Ø 6 mm, screws and pins are supplied).
Insert the transmitter on the fixing plate (see A on the drawing beside). Rotate the housing in clockwise direction until you hear a "click" which confirms that the transmitter is correctly installed.

⚠ CAUTION: ambient model has not any fixing plate. 4 fixing holes are inside the back housing.
Use them to install the transmitter on the required location.

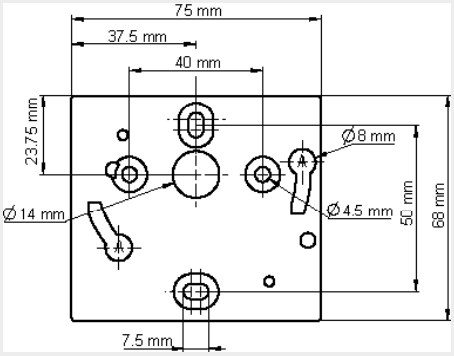

Maintenance:
- Avoid any aggressive solvent.
- Protect the transmitter and its probes from any cleaning product containing formalin, that may be used for cleaning rooms or ducts.

Precautions for use: always use the device in accordance with its intended use and within parameters described in the technical features in order not to compromise the protection ensured by the device.

Accessories

Ref.	Description
KIAL-100A	Power supply class 2, 230 Vac input, 24 Vac output
KIAL-100C	Power supply class 2, 230 Vac input, 24 Vdc output
LCC-S	Configuration software with USB cable

ⓘ Only the accessories supplied with the device must be used.

Warranty

Instruments have 1-year guarantee for any manufacturing defect.

FT_EN – CO110 – 07/10/22 – Non-contractual document – We reserve the right to modify the characteristics of our products without prior notice.