Thunderstorm (Lightning) Detector
BTD-300

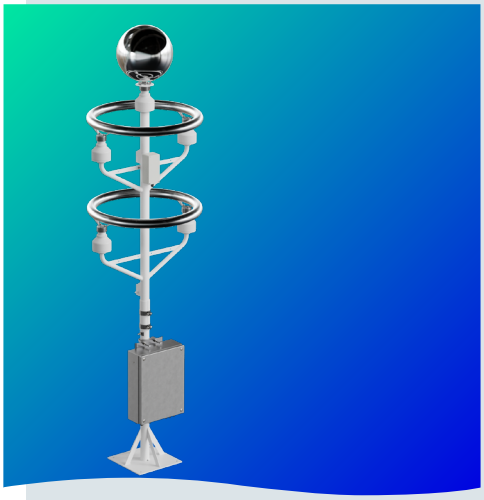

INTRODUCTION

The **BTD-300 Thunderstorm Detector** is a **standalone sensor that reliably detects all forms of lightning out to a range of 83 km**. Its unique quasi-electrostatic operating principle provides very high sensitivity with an almost zero false alarm rate and, crucially, the ability to warn of the risk of overhead lightning before the first strike occurs.

Virtually maintenance free, the BTD-300 can be used with the supplied PC display and logging software, integrated into advanced weather monitoring or safety systems, or connected directly to local warning devices via optional relay outputs. This combination of detection performance, reliability and flexible interfacing makes the BTD-300 an ideal solution for sites where both safety and operational continuity are critical.

FEATURES

Quasi-electrostatic thunderstorm detection

Uses atmospheric electric field measurements instead of radio waves, avoiding interference from electrical equipment and transmitters and delivering an almost zero false alarm rate.

Detection of all lightning types to 83 km

High sensitivity and accurate ranging for all lightning discharges, including cloud-to-ground and intra-cloud.

Overhead lightning risk warning

Monitors local electric field strength and charged precipitation to warn of overhead strike risk even before the first flash.

Optional direction finding

Add-on module provides lightning direction using radio direction-finding, qualified by the electrostatic ranging.

Flexible interfacing & standalone alarms

RS422 or Ethernet for system integration, operation with PC software, plus optional relay module for automatic local warning devices.

Low maintenance with field test option

Virtually maintenance free; an optional battery Field Test Unit simulates lightning at different ranges for commissioning and routine checks.

CONFIGURATION & MEASUREMENT

Electrostatic detection principle

Lightning discharges create a low-frequency (<50 Hz) disturbance in the atmospheric electric field. The BTD-300's three antennas measure this disturbance while filtering out high-frequency radio components, eliminating false alarms from man-made RF noise and providing coverage beyond 100 km, with an operational warning range of 83 km.

Accurate ranging and all-lightning sensitivity

All lightning types neutralise charge within the storm, producing a characteristic field change. The way this signal decays with distance allows the BTD-300 to estimate range more accurately than detectors relying only on radio wave amplitude.

True thunderstorm monitoring

Continuous monitoring of the local electric field and charged precipitation provides early warning of developing storms, including situations where the first lightning strike could occur overhead.

System integration and cost of ownership

The BTD-300 interfaces via RS422 or Ethernet or can be operated using the supplied PC display and logging software. Optional warning relays enable automatic local alarms, while the solid-state, low-maintenance design keeps overall cost of ownership very low.

- **WARNS OF OVERHEAD LIGHTNING RISK EVEN BEFORE THE FIRST LIGHTNING DISCHARGE**
- **HIGHLY IMMUNE TO RADIO INTERFERENCE WHICH IS THE MAJOR CAUSE OF FALSE ALARMS IN TRADITIONAL STANDALONE DETECTORS**
- **83 KM (45 NM) DETECTION RANGE EXCEEDS THE US FEDERAL AVIATION ADMINISTRATION REQUIREMENTS**
- **DETECTS CLOUD-TO-GROUND AND AS WELL AS WEAKER BUT MORE COMMON CLOUD-TO-CLOUD LIGHTNING**
- **DETECTS CHARGED PRECIPITATION**
- **MEETS FAA PERFORMANCE REQUIREMENTS FOR AERODROME USE**
- **MEETS EN50536:2011+A1:2012 REQUIREMENTS FOR A CLASS 1 DETECTOR**
- **MEETS IEC 62793 PERFORMANCE REQUIREMENTS FOR A CLASS A DETECTOR**
- **OPTIONAL DIRECTION FINDER**

Authorized Distributor:
LOKATOR-K OOD
Residential Complex Gotse Delchev, Block 258, Entrance A
Sofia 1404, Tel.: + 359 2 9621881; + 359 2 9622138
Mobile: 0888 64 11 68 E-mail: office@lokatork.com **www.lokatork.com**

General specifications

OUTPUTS & REPORTS

Update rate	2s
Serial outputs	Ethernet (virtual com port) or RS422
Message content	Self-test status Thunderstorm warning status Flash time Flash range Flash direction (optional)

POWER REQUIREMENTS

Sensor supply	100 to 240 Vac 50-60 Hz universal
Sensor power	~10 W
Extended heating	30 W

ADDITIONAL FEATURES

Relays (optional)	3 Relays with volt free contacts: Caution state, Warning state and Alert state Can be disabled at user configurable times
Warning thresholds	User configurable

ENVIRONMENTAL

Operating temperature with extended heating	-40 °C to +60 °C -50 °C to +60 °C
Operating humidity	0 – 100% RH
Protection rating	IP66
Wind	To 40 ms^{-1}

PHYSICAL

Material	Stainless steel, powder coated aluminium
Weight	25 kg
Height	2,460 mm
Warranty	2 years
Lifetime	>10 years

CERTIFICATION & COMPLIANCE

- CE Certified
- EMC compliance with EN61326-1997, 1998, 2001
- Compliance with EN50536:2011+A1:2012 for a Class 1 detector
- Performs in accordance with IEC 62793 for a Class A detector
- RoHS and WEEE compliant

Ordering codes

30. | | | | | |

- Configuration
  RC = regular configuration
  SC = special configuration
- Relay Output
  NR. = without relay outputs
  WR. = including relay outputs
- Data output
  TE. = Ethernet output
  TD. = RS422 Serial
- Hood heating
  EH. = extended heating
  NH. = no additional heating
- Direction finder
  WF. = with direction finder
  NF. = without direction finder

Example: 30.WF.EH.TE.WR.RC

Measurement specifications

Detects	Cloud-to-Cloud, cloud-to-ground and intracloud lightning discharges
Output	Ethernet or Serial data
Detection efficiency	95% for single lightning flash (any type) 99% for storm with 2 flashes 99.9% for storm with 3 flashes For flashes within 56 km
Range	83 km (51 statute miles)
Uncertainty	0 to 20 km > ±5 km 20 to 83 km > ±10 km
Repeatability	0 to 20 km > ±300 m 20 to 83 km > ±1000 m
Range Resolution	10 m
False alarm rate	<2%
Maximum flash rate	120 per minute
Time of flash	Nearest 10ms (internal clock)
Measurement principle	Passive, quasi-electrostatic, no moving parts
Direction (optional)	Resolution 1°

Dimensions

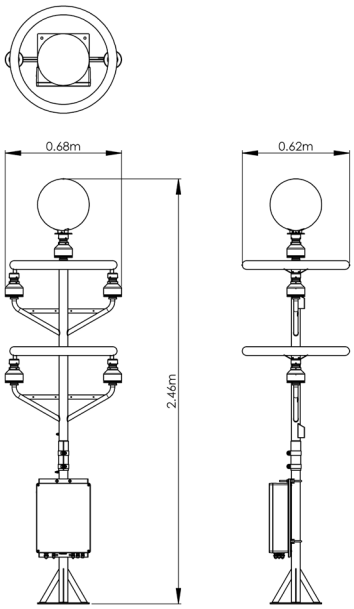

Accessories – Optional

BTD.DIRUP	Direction finder field upgrade
BTD.FTU	BTD-300 Field Test Unit
BTD.SK300	BTD-300 Spares Kit
BTD.WTY300	1 Year Extended Warranty

The sensor is delivered in sturdy foam lined wooden crate with display and logging software, manual and calibration user certificates.

DOC101267.12B - vs1.1

Senseca UK Ltd
Unit 8, Harbour Road Trading Estate - Portishead
Bristol - UK - BS20 7BL
www.senseca.com - info.bristol@senseca.com